RG-CAM30-S CAM30-T

copyright © 2023 ج ﻝ ﻡ

ﻭ [illegible] [illegible]

ج ﻝ ﻡ [illegible] ‗ p [illegible] [illegible] ف Φ

[illegible] ں ﺭ [illegible] [illegible] ﺭ [illegible] [illegible] 2 إ [illegible] [illegible] [illegible]

[illegible] ‰ ج ﻝ ﻡ [illegible] ج ﻝ ﻡ ‰

[illegible] [illegible] ‰ ├ ‰ ٠ ٥ [illegible]

ى [illegible] ﻩ ﻙ [illegible] ﺃ ₲ [illegible] ١ [illegible] ﻙ [illegible] [illegible] [illegible] ﻩ Î b

Ĵ [illegible]

ح ک گي

z لا ٨ ٧

z

z لا ٨ ٦ ת

z ج لا ٨ لا 1 https://www.ruijie.com.cn

z ج لا ٨ لا 1 ٧ https://www.ruijie.com.cn/fw/

z ج لا ٨ 7*24h أ ذ ٥ https://ocs.ruijie.com.cn

z ج لا ٨ 7*24h ٨ ٨ 4008-111-000

z ج لا ٨ —— ج

V ° N ì U T k e p L

2.

2 I
1 ⅵ 1
1.1 ⊏ ⅋ ▌ 1
1.2 ⅄ 3
1.2.1 ⸗ ⅄ 3
1.2.2 ⅂ 4
1.2.3 ⅄ 6
1.3 h‡ 7
2 ├ ° 7
3 ⊏ 8
3.1 ⊏ 8

HD™.....

1

RG-CAM30-T AF 42 °

RG-CAM30-S 95 ° 4K Sensor 4K

1.1

1-1

1-1

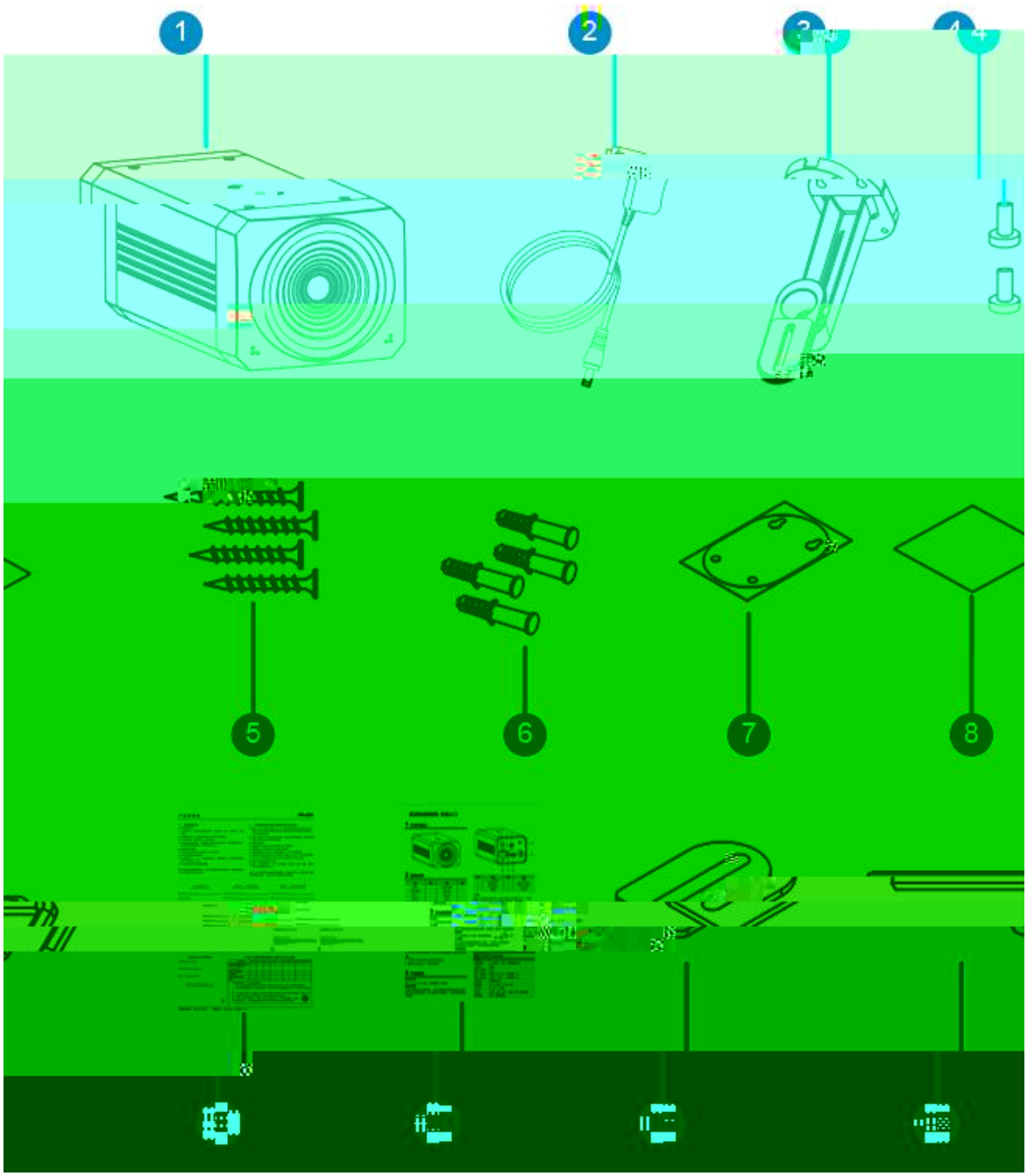

1.2

1.2.1

1-2

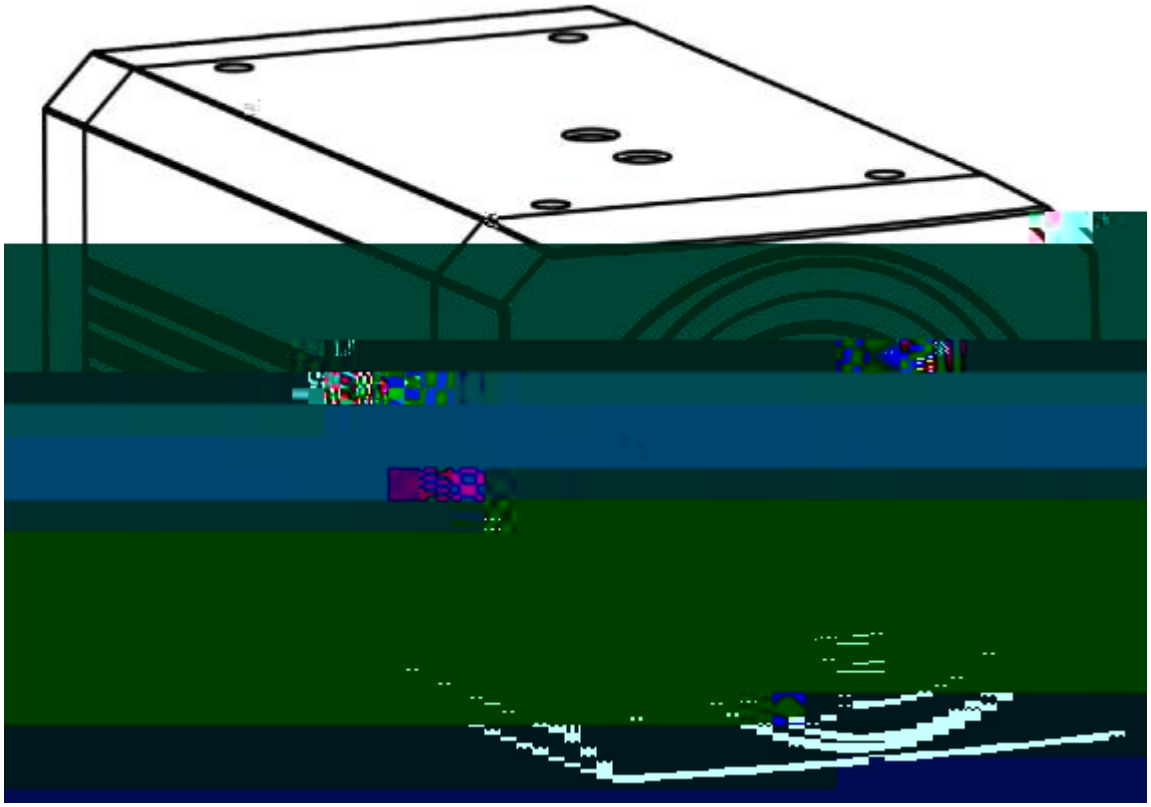

z AF ᴇ

42° ᴇ ᵹ # ᵻ ᵻ ᴌ ᵿ 95° ᴇ ´ ᵽ EPTZ

~ ▌

z ᴌ

ᴀ ᴇ ⅝ CMOS ᴗ ᴌ ᴏ ᵻ 2D 3D ᴗ ᴎ |

ᴗ ᴀ ᴌ ᵻ ᴇ ▌ ⅝ ᴇ 55dB

z ᵿ

SDI ᵿ ' ᵿ ᴇ 150 ᴎ 1080P25 SDI ᴎ ᴎ ᵿ ᵿ

z POC POE

POC Power Over Cable POE Power Over Ethernet ᵻ ᴗ ᴗ ᴐ ◊ ᴐ ᴇ ᴇ ᴇ ᵻ

z ᴎ ₩

ᴀ SDI ᵿ ᵿ

1.2.2

1-3 mm

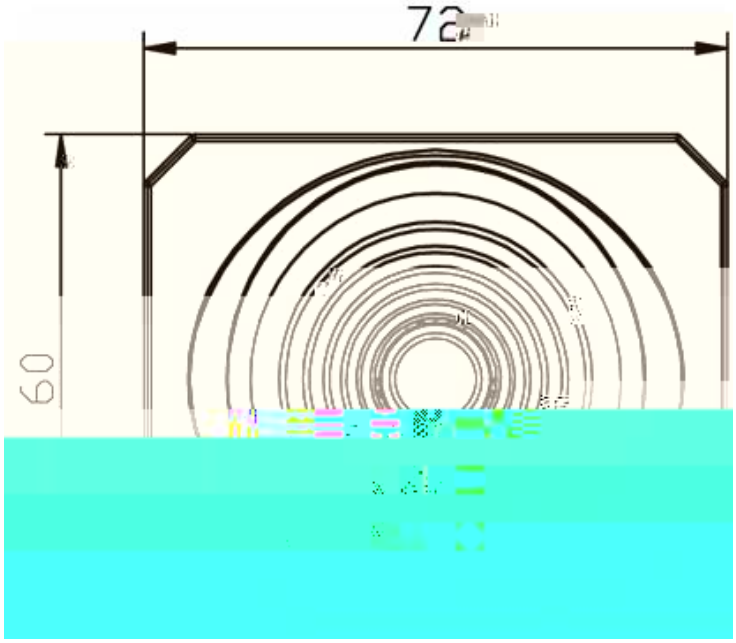

1-4

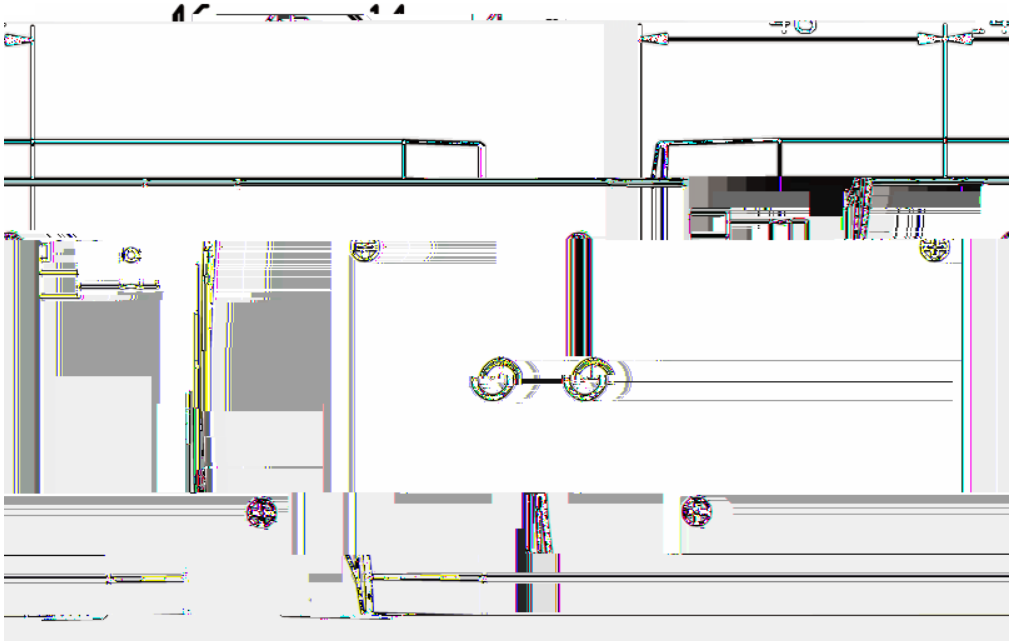

1-5

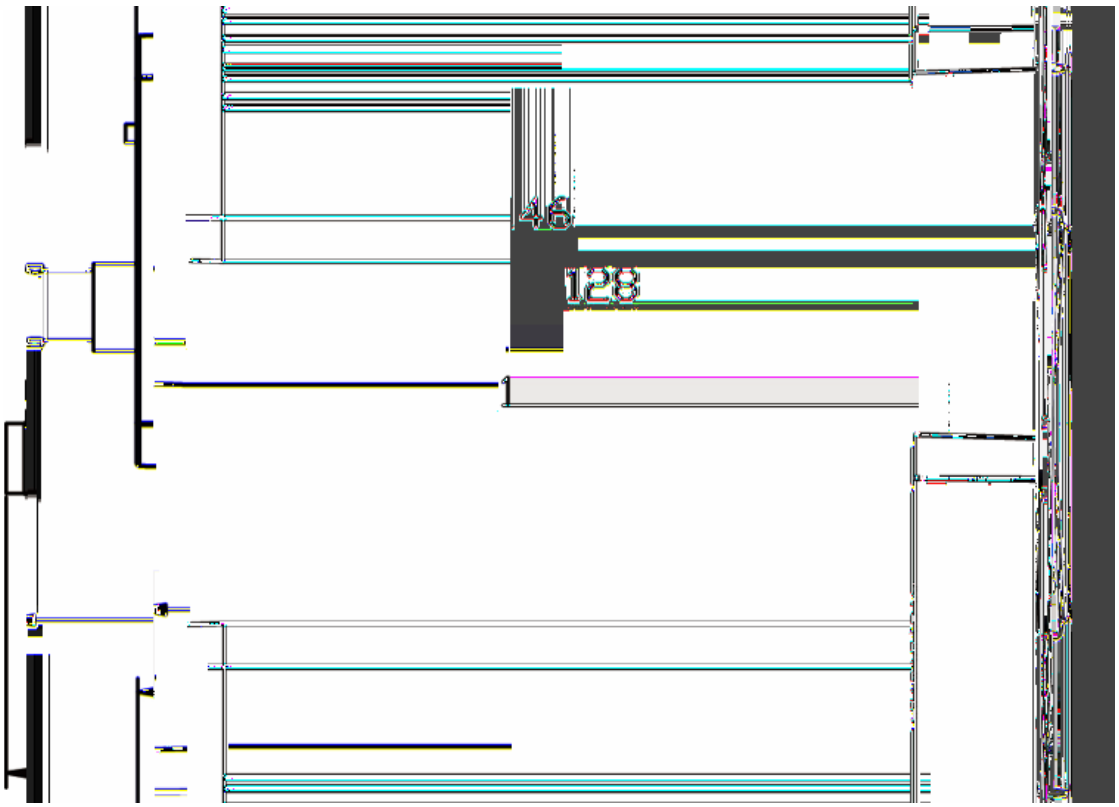

1.3

1-3

	RG-CAM30-T	RG-CAM30-S
	ٮ ٮ	ٮ
	846	
	3840*2160	
	25fps	
	42	95
	H.265/H.264/MJPEG ð ٮ ٮ	
	PoE IEEE802.3af ٮ ٮ ٮ	
	TCP/IP HTTP RTSP RTMP ONVIF DHCP ٮ	
	6W	
	DC 12V / PoE (IEEE1 253/83(0)-3(*2-3(.)11(3)-3(a)-3(f)]) TJETQEMC /P <</MCID 122	

2-1

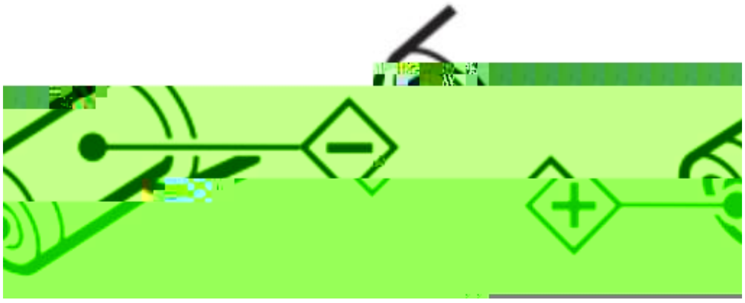

z

ﻻ ﺕ ﺓ . ﺇ ﺕ ﺓ ﺇ ﺕ ﻥ Ͽ

z

ﺓ 5 Φ ﺓ 5 Φ ﺝ

⚠ ₣

(Ŋ)‰º +k.ᵽ%73P6p4 >

3

3.1

ﺇ ﺕ

3-1

ﻓ	ﻓ ´ 6mm
	ﺇ PH2
ﻔ ﻻ	‰ L ﻓ ﺎ
ﺝ	ﺇ ‹
ﺚ	. ռ ﺇ ﺎ

3.2

3-1

3.2.2

z ᴇ ᴇ ᴇ ᴇ ᴇ ᴇ ᴇ 2.2-

xÈÉ Vp[illegible]F4B5PXÈž

3-2

z ρ Ь

Ñ گ ۲ ﷺ ع ۷ ﷺS ρ ´ Ь ر ' ˜

غ ˚ ˛ ب ă ˝ '

Ñ ﷺ ع ⅝ ۷ ﷺS ρ ب ۲ Ь ﷺ . س—ﷺ ' ˜

ת ﷺ ي ' ˜ ص ‡ ... ٨ ص س— ﷺ ˝ ﷺ ز ﷺ ٦

ן ﷺ ق ن ﷺ ع ˝ ً ك ă ˝ ع ﷺ ▌

3.2.3

z Ь ح □ ' ˝ 2.1-2.4 ۷

z Ь ر

Ñ * Ь Ь ر س— ˝ ژ ر * ˝ ۱ ع ˝

Ñ Ь ᗡ ᗡ ᗡ 20~30° ш ٧

ᗡ ᗡ ᗡ

3-5

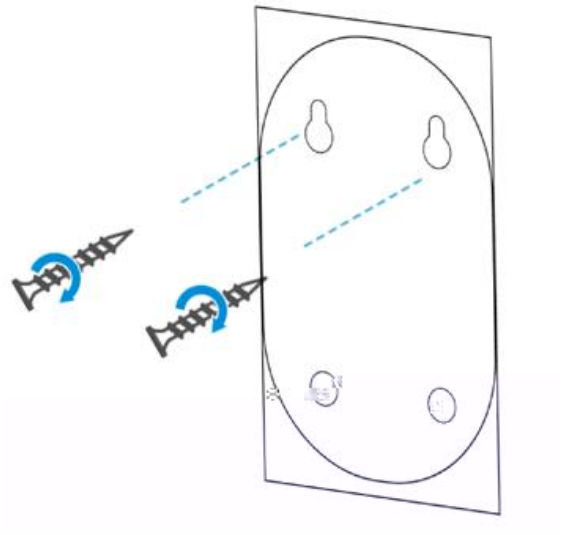

(3) ᵘ ᵓ 2 ⁵ ˩ 4 ᵘ ᴇ

3-6

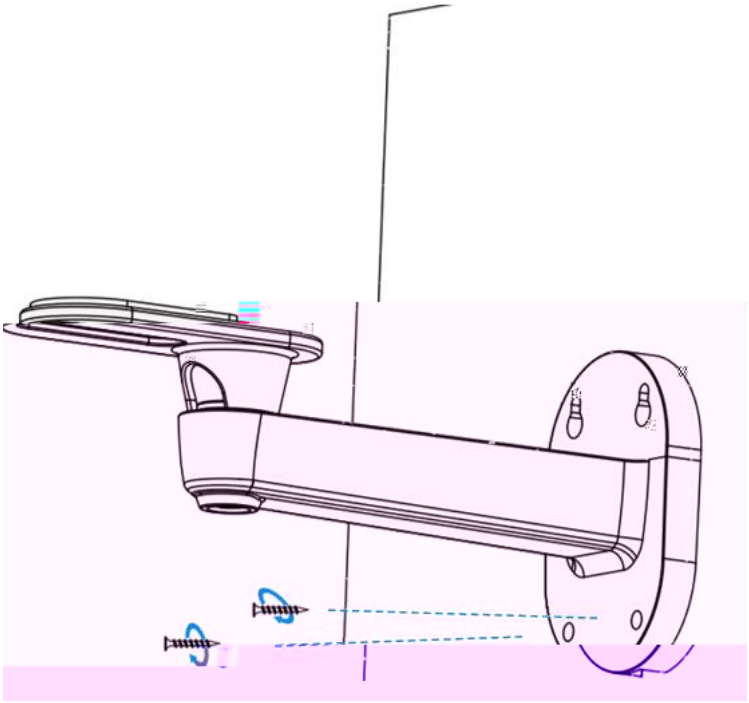

3.4.2

(1) ᵘ ᑕ ˧ ᵊ ᵘ ˩

3-7

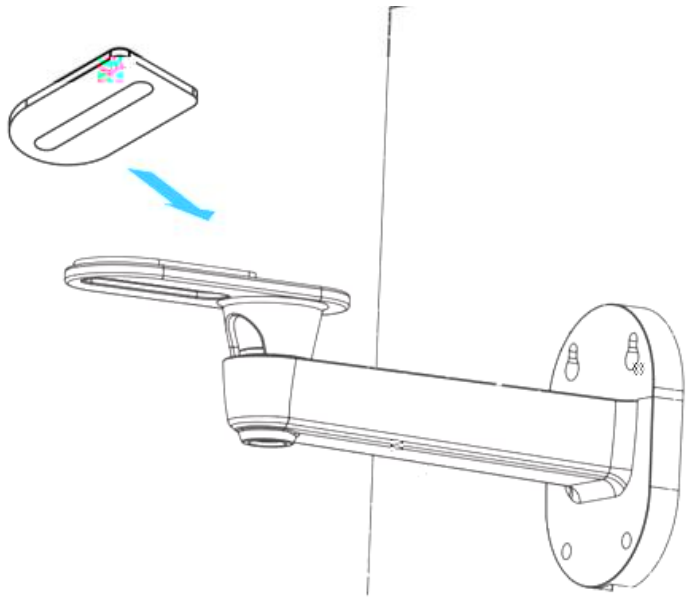

(2) ᵓ L — ᵘ ᴏʙᴊ ᴜ

3-8

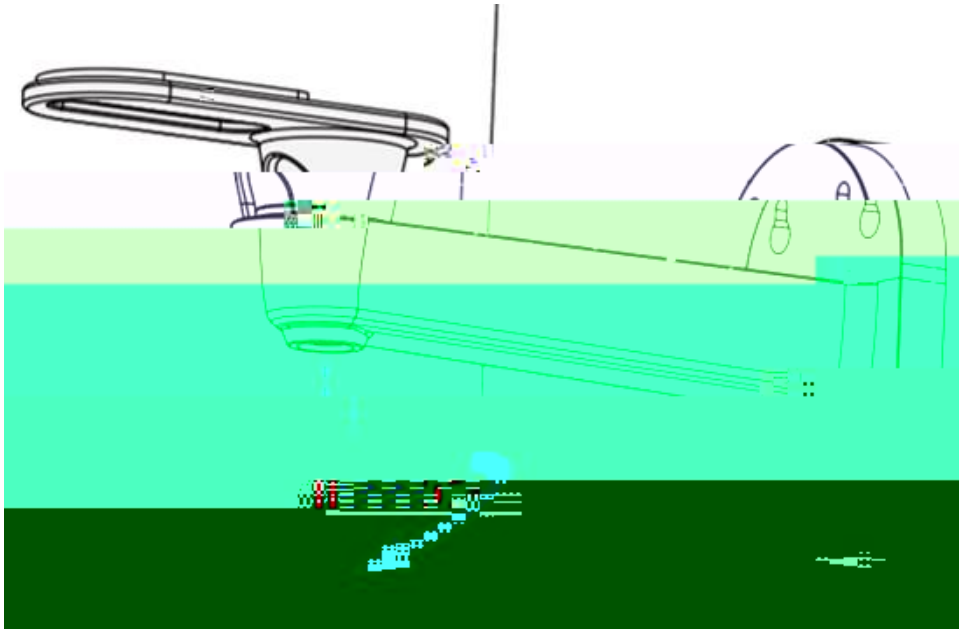

(3) ᴊ ᵘ

3-9

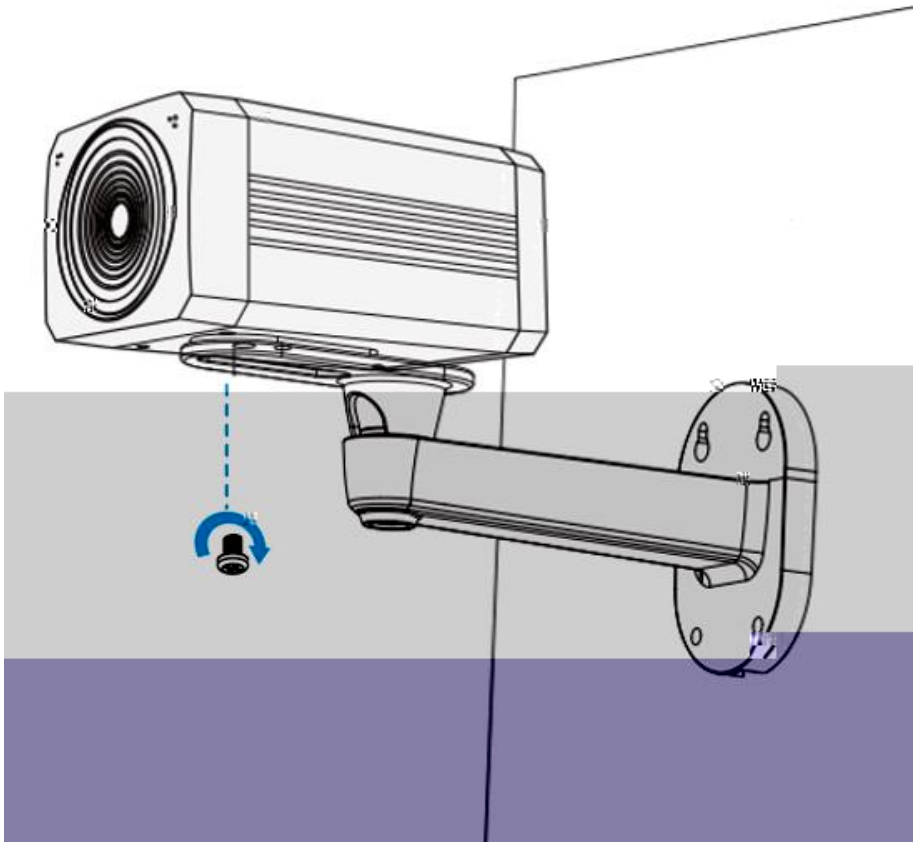

(4) ذ ل ل Ł

3-10

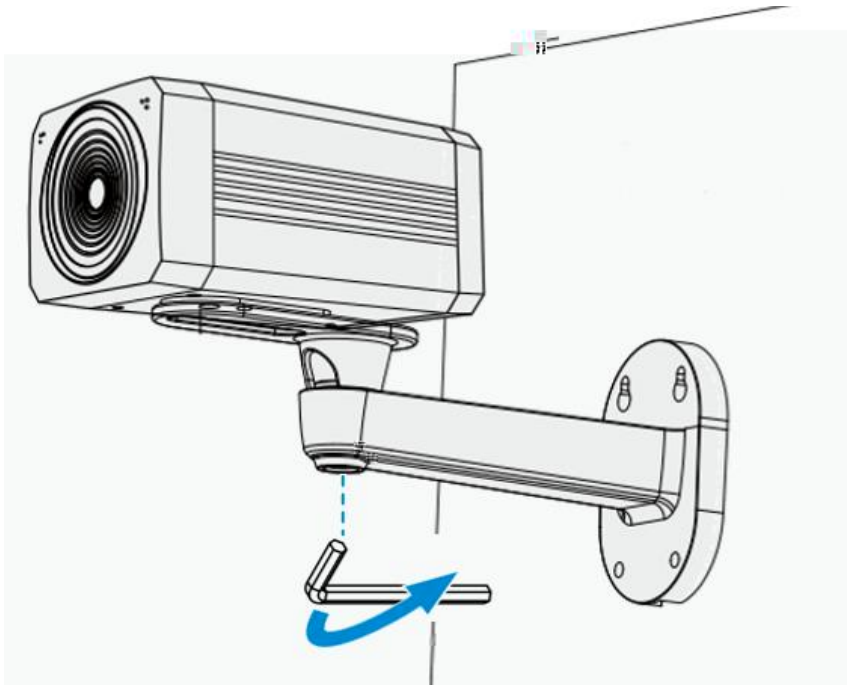

3.5

ᴉ ᴐ ᴐ ◊ ᴐ PoE ᴐ ᴐ ف

z ᴐ ◊ ᴐ ᴊ ᴊ ᴐ ◊ DC 12V

z PoE ᴐ PoE ⊕

ᴊ ᴊ ف ♂ ᴊ ᴠ ᴠ ~ ♂ ᵈ ♣ ~ ~ ف ᴛ ᴛ

4

4.1

ᴌ ᴉ ᴉ ᴉ PC ᴌ ᴉ ∂

z ᴊ ᴊ Windows 2000/2003/XP/Vista/7/8/10

z ᴊ ᴊ ᴉ TCP/IP

z ᴊ PC ᴉ ᴉ P4/128M RAM/40GHD ᴊ DirectX 8.0

z ⊨ ᴉ

Ñ IE ⊨ ᴉ H5 ᴉ ᴉ VLC ⊨ ᴉ ᴇ ᴉ ᴇ VLC ᴊ 1 http://www.videolan.org/vlc/

ᴉ ᴇ 32 VLC media player ᴉ ᴇ ᴇ ᴉ * ~

Ñ ᴌ ⊨ ᴉ H5 ᴉ ᴇ VLC

4.2 IP

ᴉ ᴉ IP ᴊ ᴊ ᴊ ᴇ ᴉ ᴌ ᴉ

ᴐ ᴐ PC ᴊ ᴊ ᴉ ᴉ ᴉ ᴉ ᴉ ف

z ᴐ ᴐ PC ᴉ ᴉ ᴉ ᴉ ف

z ᴐ ᴐ PC ف

4-1

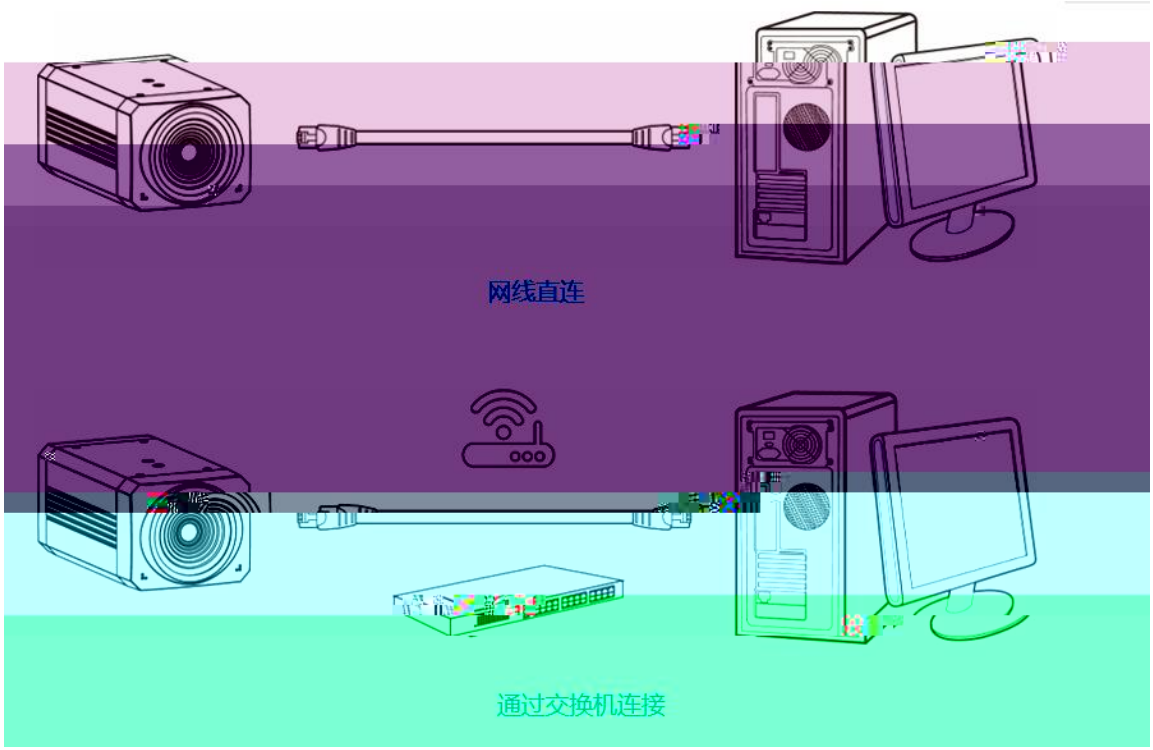

Ч IP Web

z Web PC

a PC IP IP

- IP 192.168.5.191

- IP 192.168.5.163

b admin admin < >

4-2

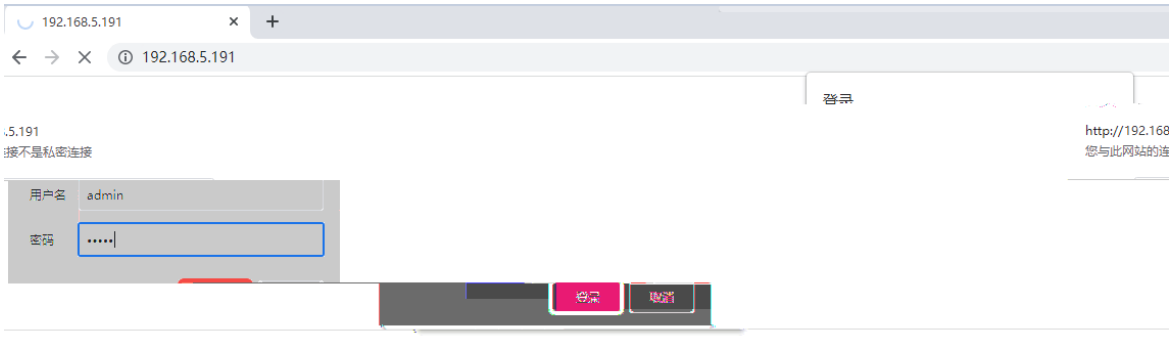

c < Web > IP

d < > IP

4-3

z ب ـ ـ ɔ ǒ PC ن ص ـ ـ ʌ ´ ف

a ɔ ǒ PC ɔ ɵ ـ ـ ” ـ ـ ب ـ ـ ‘ “ ɔ

b ف [ʌ] ˘ ˛ ˥ ˧ ɸ IP

c [ب ـ ـ] ° ɸ ـ IP

d <ɸ ـ > ي IPب ـ ـ ا

B*D

DDG5B- A5KF5‡ 9ɸ

4-4

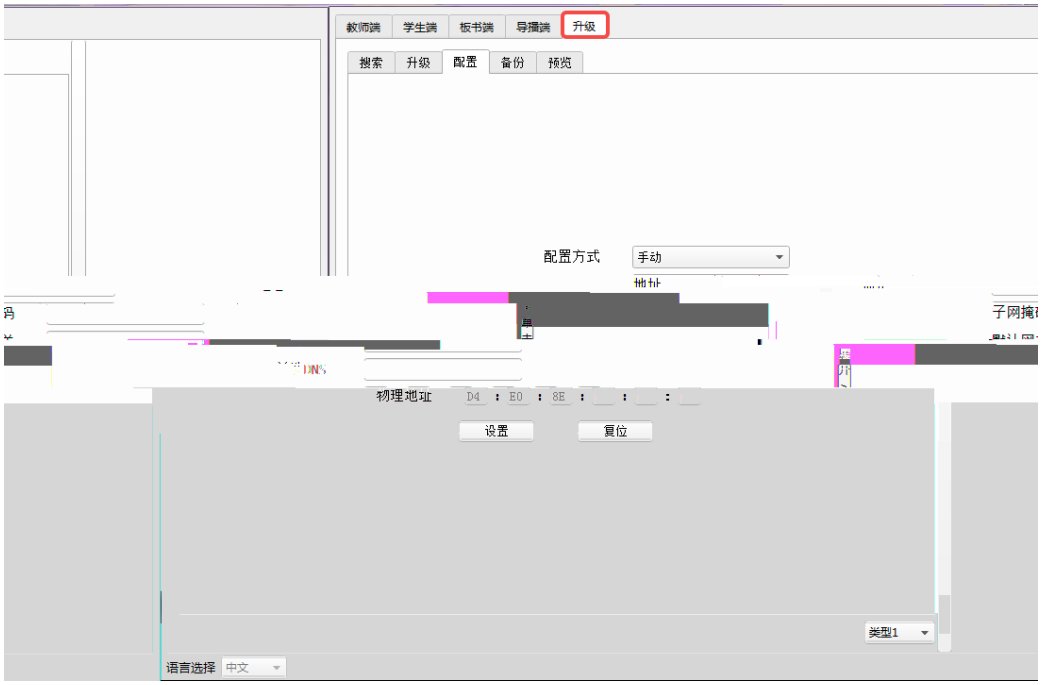

5

5.1

z ' ㄴ ㄱ ㄱ ⅞ ㄷ ㄱ ◊ ㄴ ㄱ ◊ ㄱ ㄴ

z ▌ㄴ ⌧ㄱ ㄱ ㄱ ㄷ ⌧ㄱ ㄱ 6 ㅅ

z

	⎢ ن ص IE ⊨ η ᴌᴌ ᴅ IP Camera	● ᴛ PC ᴌ ᴎ ᴌᴌ ; ᴌ ᴎ ᴌ ᴀ* ᴎ ᴌ ᴏᴂ ᴠ ⅜ ᴅ PC ᴋ ᴌ ᴎ ᴛ ᴛ ᴎ ᴌ ᴛ ᴋ ´ ᴆ PC ᴀ ᴀ Ping ن ● ᴌ ᴎ ᴏᴂ ف ᴍ PC ف ᴠ ᴀ ᴨ ᴘ ᴌ IP ● ᴆ ᴏᴂ IP ᴌ . ᴌ ᴌ ᴌ * ● ᴆ MAC ᴌ ● ᴆ Web ᴎ ᴑ ᴌ ᴛ
	ᴌ IP ᴌ ᴌ ᴍ ᴀ .	● IP 192.168.5.191 ᴉ IP 192.168.5.163 ● ᴝ ᴎ ᴛ admin ᴝ ᴎ . admin